FACTS

SVCs for voltage control and power oscillation damping in weak 115 kV system in Alaska

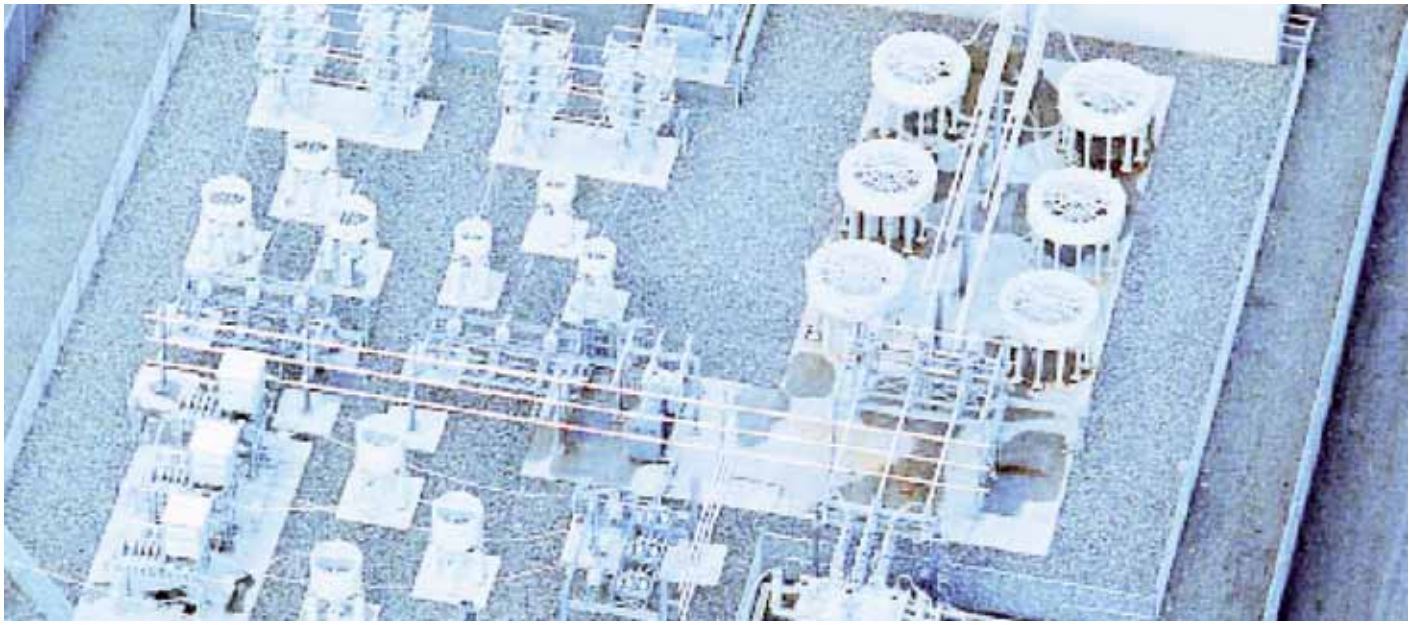

Two ABB Static Var Compensators (SVC) have been in operation since 1993 in the 115 kV system which transmits power from the Bradley Lake hydro plant, located in the Kenai Peninsula, to the Anchorage area more than 300 km further to the north.

The Bradley Lake hydro project was built to reduce Alaska's dependence on oil. The project included the upgrading of the existing Kenai power system.

The most economical solution for exporting the power from the Kenai Peninsula to Anchorage was to rely on a single 115 kV transmission line. However, without the SVCs, system stability would be a limiting factor on power transmission, preventing the use of the hydro plant to its full capacity. By installing Static Var Compensators at two locations along the line, it was possible to avoid the much higher cost of upgrading the transmission line. One SVC is located at Soldotna, the other one at Daves Creek, next to existing switching stations. Both SVCs are operated by Chugach Electric Association (CEA).

Soldotna is about one third of the distance from the generating station. Daves Creek is a little more than one third of the distance from the main load center. The compensators offer dynamic voltage control as well as damping of active power oscillations which tend to build up between Bradley Lake and generating plants around Anchorage as well as Fairbanks further to the north, especially during heavy power export from the Kenai Peninsula.

Voltage control is performed to keep the system voltage within set limits both during steady-state conditions and in emergencies such as loss of line, where without the compensators there would be high overvoltage in the system.

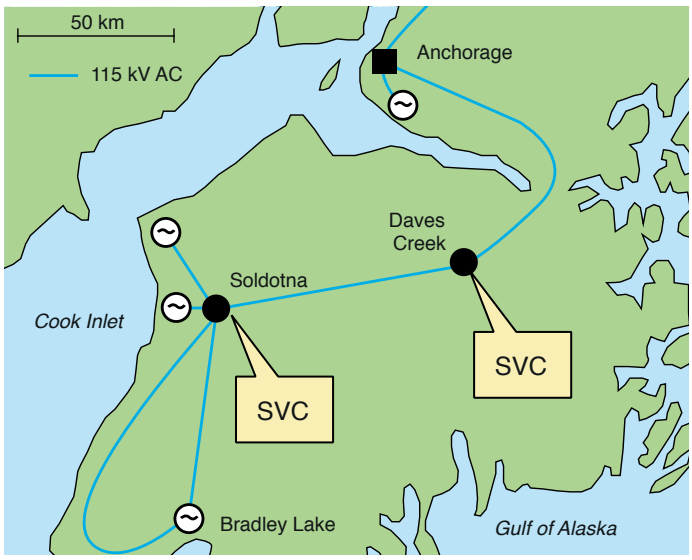

The economic benefits of the SVCs are substantial. Without them, power export to Anchorage is limited to 45 MW. With the SVCs in operation, 75 MW of hydro power can safely be transmitted to Anchorage, replacing more expensive power that would otherwise have to be generated locally by gas turbines.

The SVC at Soldotna comprises a Thyristor-Controlled Reactor (TCR) rated at 70 Mvar, a Thyristor-Switched Capacitor (TSC) rated at 40 Mvar, as well as harmonic filters totally rated at 30 Mvar and tuned to the second, fifth and seventh harmonics. The compensator covers a dynamic range from 40 Mvar inductive to 70 Mvar capacitive. The SVC at Daves Creek has a dynamic range of 10 Mvar inductive to 25 Mvar capacitive, comprising a TCR rated at 35 Mvar as well as harmonic filters rated together at 25 Mvar and likewise tuned to the second, fifth and seventh harmonics.

The control system is of the symmetrical three-phase closed loop type, with power oscillation damping control (active all the time) as well as voltage control. A susceptance limiter is active in the voltage control mode to ensure that there is always sufficient dynamic var range available to cope with power oscillations in the network.

The short-circuit power of the 115 kV system can vary substantially (by a factor 6-8), and can thus become extremely low. In some cases it can drop to 40 MVA – less than the Mvar rating of one of the SVCs. Therefore, the controllers have been designed with particular concern for operating under such adverse conditions.

Another important feature of the compensator control is the ability to have the two compensators operative during energization of the 115 kV line. This will limit transient overvoltages due to line switching.

Technical data	Soldotna	Daves Creek
Controlled voltage	115 kV	115 kV
SVC rating	40 Mvar inductive to 70 Mvar capacitive	10 Mvar inductive to 25 Mvar capacitive
Control system	Three-phase voltage control and power oscillation damping by means of a closed-loop regulator	
Thyristor valves	Water-cooled three-phase valves with indirect light triggering	

Application Note A02-0145 E, 2011-04

Single-line diagram

Soldotna

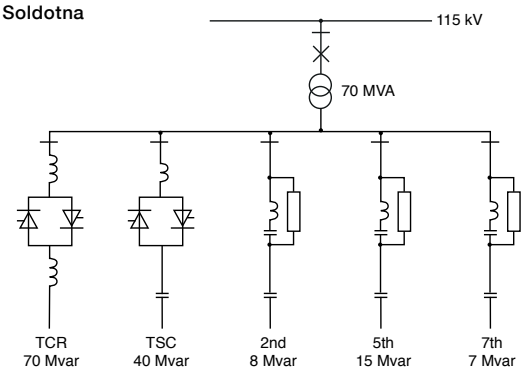

Daves Creek

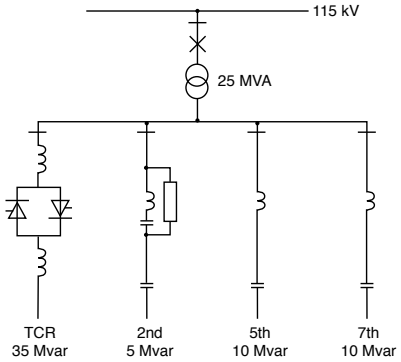

Station layout (one SVC)

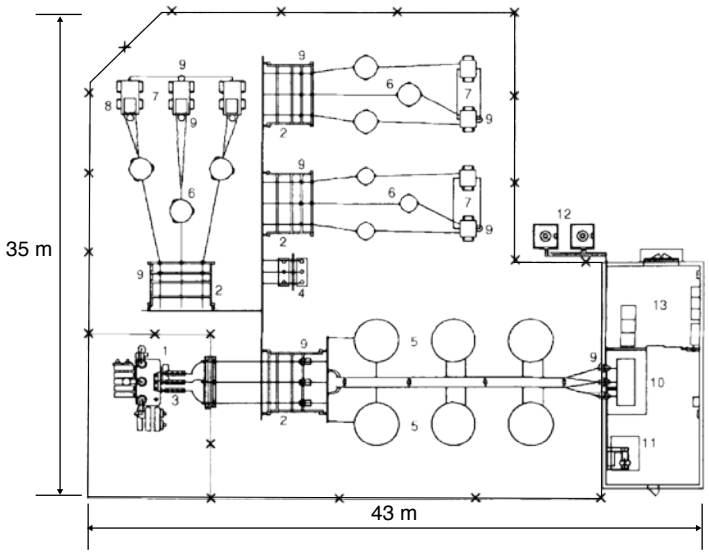

1 Step-down transformer
2 Disconnector
3 Surge arresters
4 Grounding transformer
5 TCR reactors
6 Filter reactors
7 Capacitor banks
8 Damping resistors
9 Current transformers
10 Thyristor valve
11 Pump station
12 Cooling towers
13 Control room

For more information please contact:

ABB AB
FACTS
SE-721 64 Västerås, Sweden
Phone: +46 21 32 50 00
Fax: +46 21 32 48 10

www.abb.com/FACTS